DWG NO	LAYUP	LADDER BACKING
188161-01	188161-11-000	W-4
188161-02	188161-12-000	- - -
188161-03	188161-13-000	- - -

RELEASE	REV A	DATE 10--23--13	DWG NO 188161

REV	ZONE	REVISION RECORD	DATE	DFTR-ORIG
B	SH1	ADD TAB -03 WITH LAYUP -13, FIX -T01 LADDER BACKING	05-15-14	3660
C	SHT2	MOVED WIRE PATH	06-25-14	2796-5575

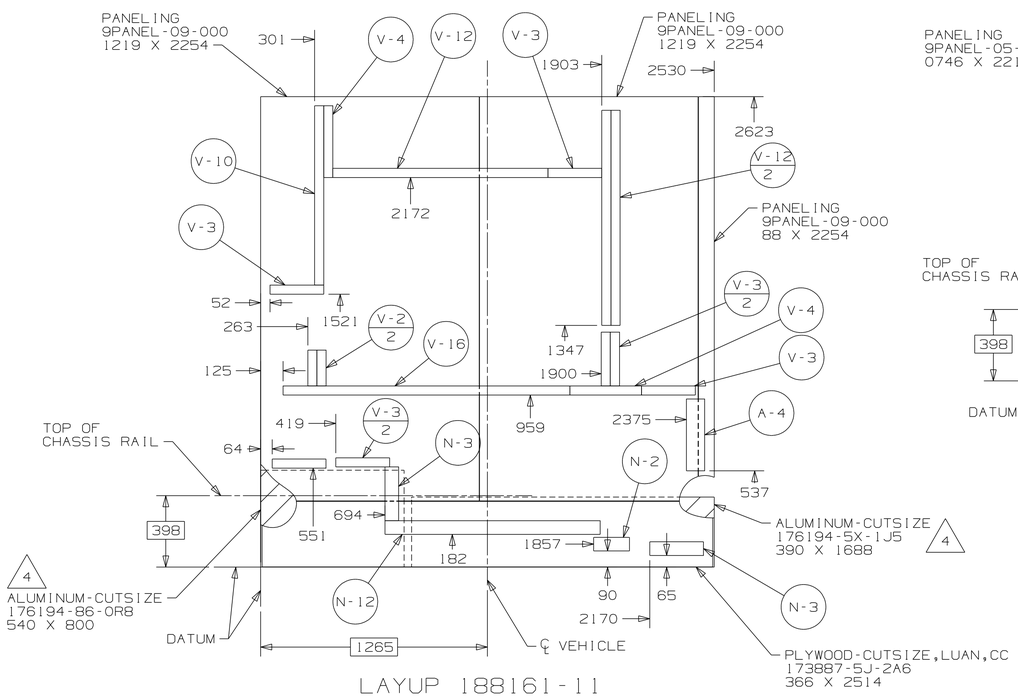

LAYUP 188161-11

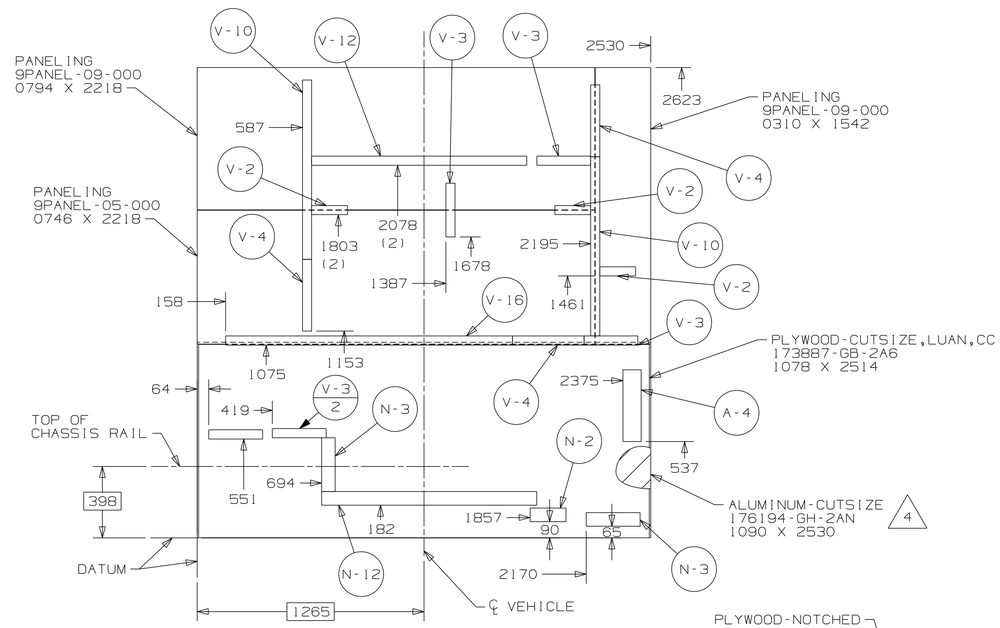

LAYUP 188161-13

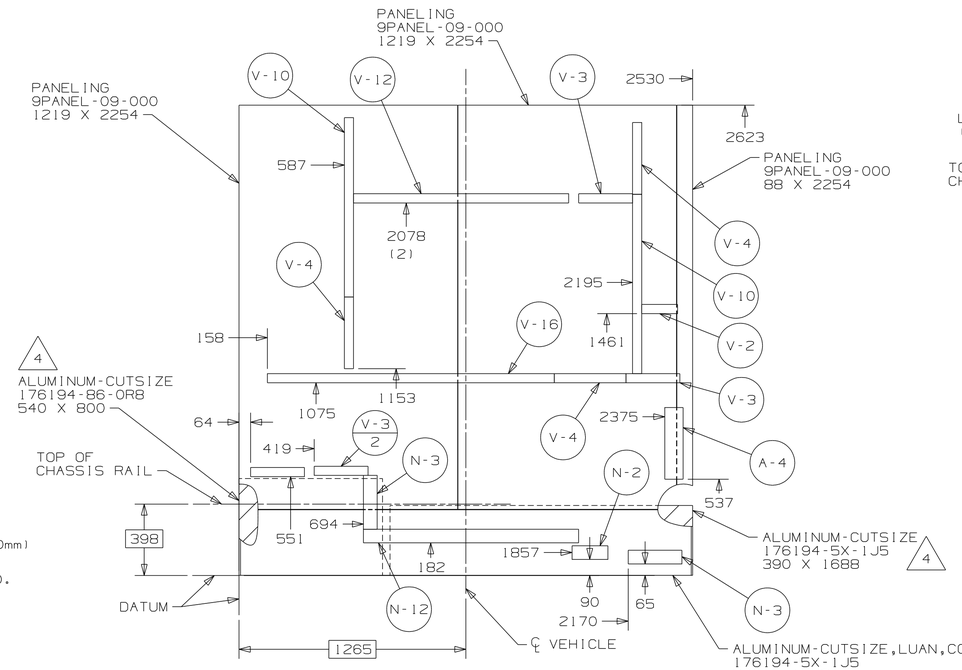

LAYUP 188161-12

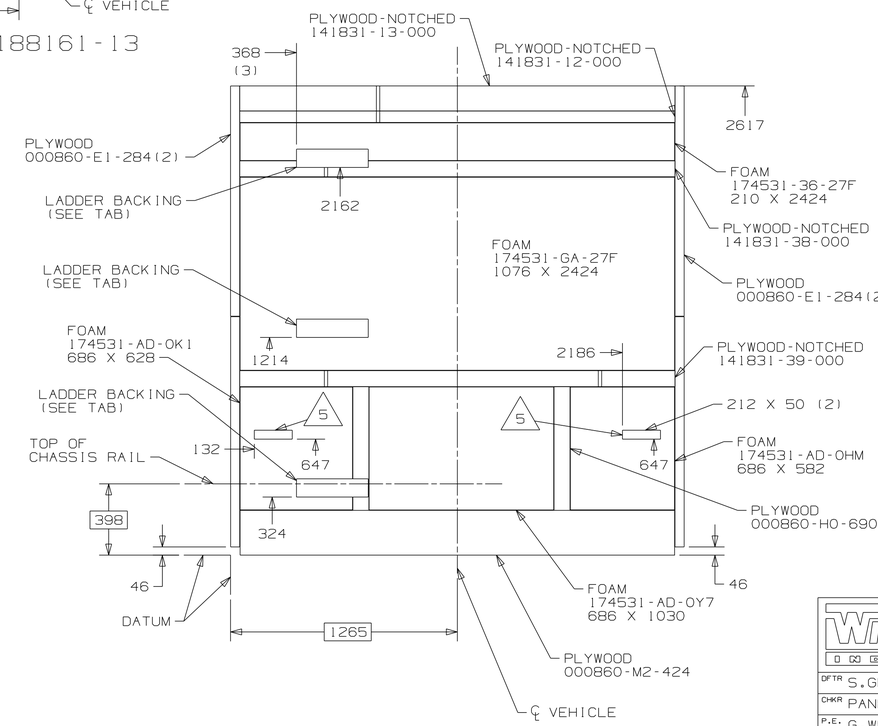

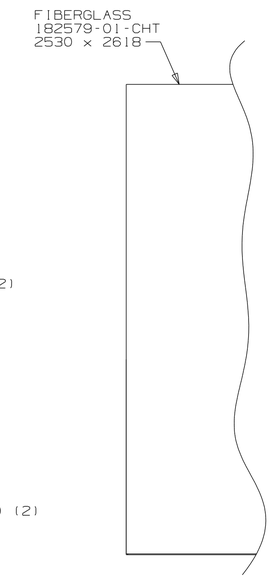

5. THRU FOAM ONLY.

4. USE 173983-01-CHT TO SEAL SEAM (550mm)

3. TOLERANCE FOR LAYUP ±2.5, STEEL±6.0.

2. SEE ES0064 FOR ADHESIVES.

1. PANEL SHOWN FROM EXTERIOR SIDE.

NOTES:

X-X — FOR STEEL CALLOUTS SEE DWG NO. 114074-01-000

NOTICE

CHANGES TO THIS SHEET MAY AFFECT OTHERS

WINNEBAGO INDUSTRIES

COPYRIGHT 2014 WINNEBAGO INDUSTRIES, INC.

DFTR S.GLEASON	ORIG. DATE .
CHKR PANELS GROUP	ALL DIMENSIONS ARE IN MILLIMETERS
P.E. G.WESSLING	
M.E. T.MIKES	FIRST USED 13 E27N
DSNR D.AUKES	

UNSPECIFIED TOLERANCES ARE: WHOLE DIM (X) : ; ONE-PLACE (X.X) : ; TWO-PLACE (X.XX) : ; ANGLE : (3)

MATERIAL:

THIRD ANGLE PROJECTION

DO NOT SCALE DRAWING — REFER TO ES0018 FOR FASTENER TIGHTENING GUIDELINES

TITLE: BACKWALL ASM

SHEET 1 OF 2 — PART NO 188161 — REV C

REF: 185840H 1