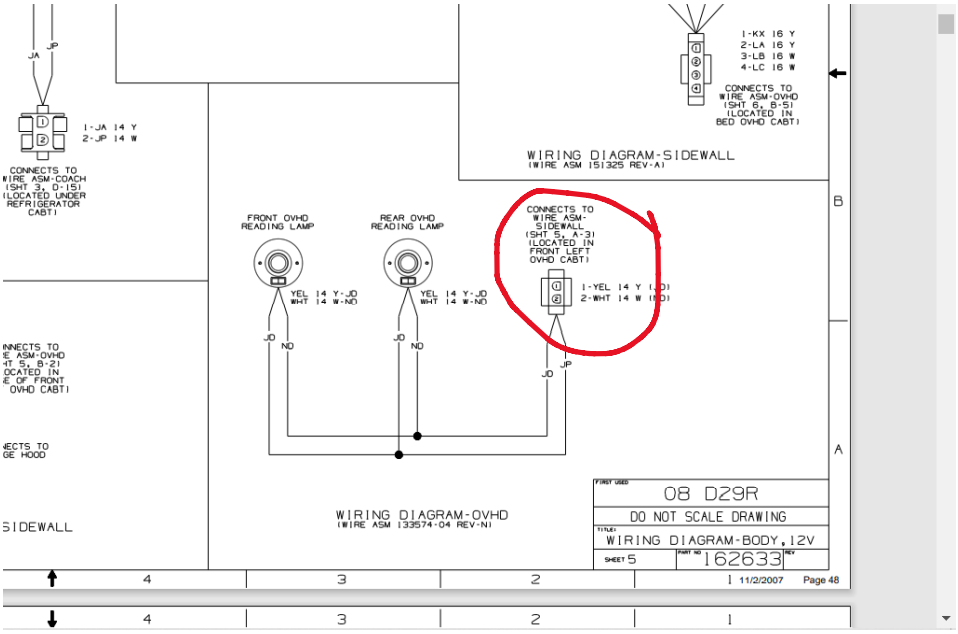
WIRING DIAGRAM-SIDEWALL
(WIRE ASM 151325 REV-A)
CONNECTS TO WIRE ASM-COACH (SHT 3, D-15) (LOCATED UNDER REFRIGERATOR CAB)
1-JA 14 Y
2-JP 14 W
1-KX 16 Y
2-LA 16 Y
3-LB 16 W
4-LC 16 W
CONNECTS TO WIRE ASM-OVHD (SHT 6, B-5) (LOCATED IN BED OVHD CAB)
FRONT OVHD READING LAMP
REAR OVHD READING LAMP
CONNECTS TO WIRE ASM-SIDEWALL (SHT 5, A-3) (LOCATED IN FRONT LEFT OVHD CAB)
1-YEL 14 Y (JO)
2-WHT 14 W (NO)
YEL 14 Y-JO
WHT 14 W-NO
WIRING DIAGRAM-OVHD
(WIRE ASM 133574-04 REV-N)
08 D29R
DO NOT SCALE DRAWING
WIRING DIAGRAM-BODY,12V
SHEET 5
162633
11/2/2007
Page 48

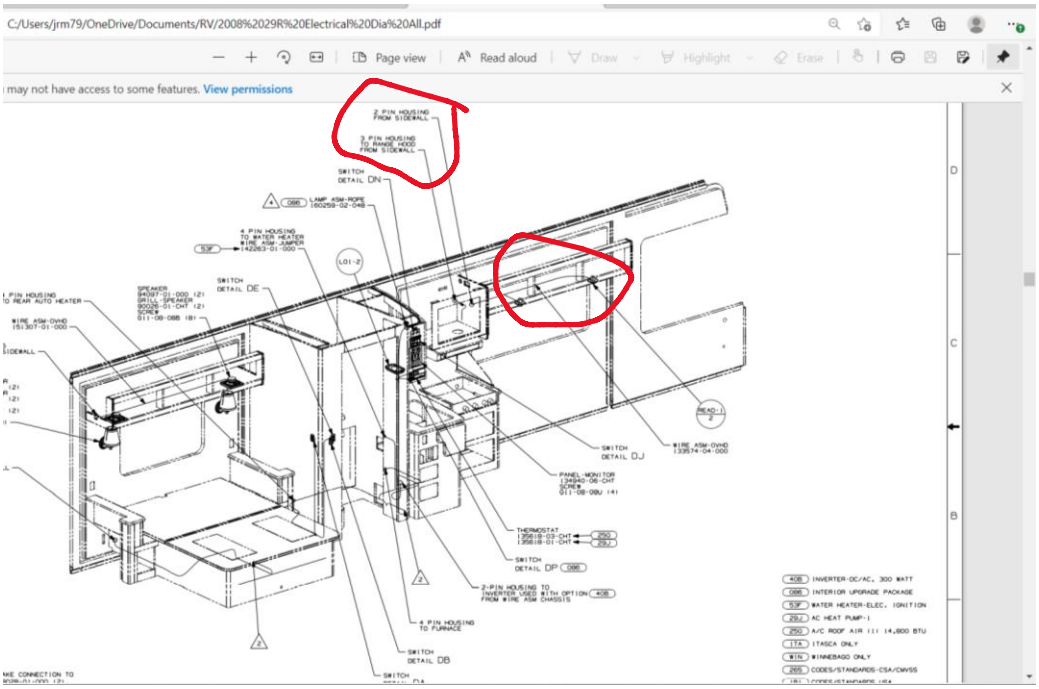
C:/Users/jrm79/OneDrive/Documents/RV/2008%2029R%20Electrical%20Dia%20All.pdf
Page view
Read aloud
Draw
Highlight
Erase
may not have access to some features. View permissions
2-PIN HOUSING FROM SIDEWALL
3-PIN HOUSING TO RANGE HOOD FROM SIDEWALL
SWITCH DETAIL DN
4-PIN HOUSING TO WATER HEATER WIRE ASM-JUMPER
SWITCH DETAIL DE
SWITCH DETAIL DJ
WIRE ASM-OVHD 133574-04-000
PANEL-MONITOR
THERMOSTAT
SWITCH DETAIL DP
2-PIN HOUSING TO INVERTER USED WITH OPTION FROM WIRE ASM CHASSIS
4-PIN HOUSING TO FURNACE
SWITCH DETAIL DB
INVERTER-DC/AC, 300 WATT
INTERIOR UPGRADE PACKAGE
WATER HEATER-ELEC, IGNITION
AC HEAT PUMP-1
A/C ROOF AIR 11 14,800 BTU
ITASCA ONLY
WINNEBAGO ONLY
CODES/STANDARDS-CSA/CMVSS