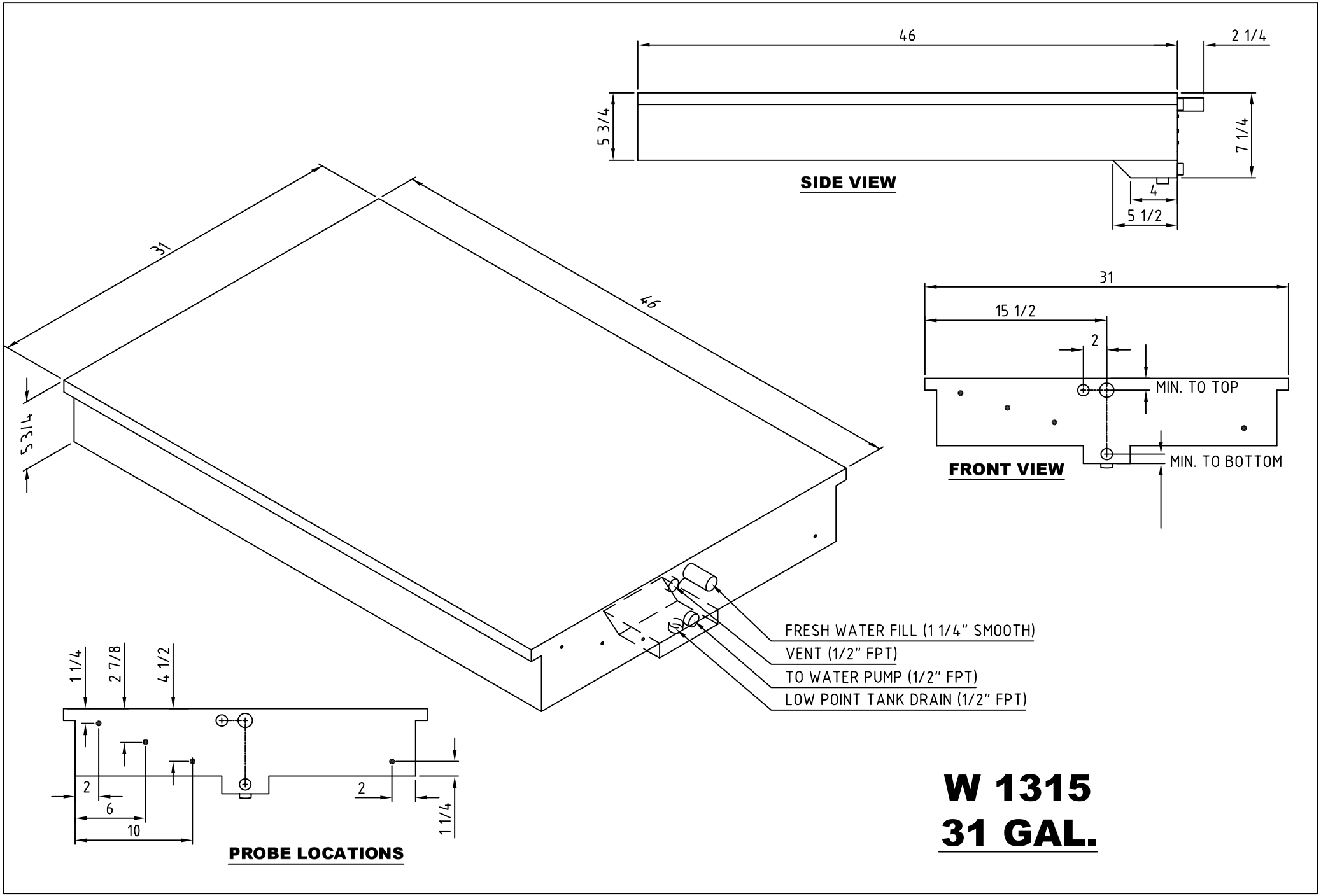
46
2 1/4
5 3/4
7 1/4
SIDE VIEW
4
5 1/2
31
46
5 3/4
31
15 1/2
2
MIN. TO TOP
MIN. TO BOTTOM
FRONT VIEW
FRESH WATER FILL (1 1/4" SMOOTH)
VENT (1/2" FPT)
TO WATER PUMP (1/2" FPT)
LOW POINT TANK DRAIN (1/2" FPT)
1 1/4
2 7/8
4 1/2
2
6
10
2
1 1/4
PROBE LOCATIONS
W 1315
31 GAL.