LCI Level-Up Motorhome Leveling (2013-Present)

OWNER'S MANUAL

LIPPERT COMPONENTS™

TABLE OF CONTENTS

SYSTEM 3
- Prior to Operation 3
- System Description 3
- Component Description 4
- Fluid Recommendation 4
- Preventative Maintenance Procedures 4
- Aluminum Jacks 5
- Power Unit Components 6

CONTROLS 7
- Features 7
- System Wiring Requirements 7
- Air and Auxiliary Features 7
- Level Zero Point Calibration 8
- For Diesel Units with Air Bag Suspensions ONLY: 8
- Miscellaneous 8
- Low Voltage Signal 9
- Excess Slope 9
- Error Mode 9

OPERATION 10
- Selecting a Site 10
- Automatic Leveling Procedure 10
- Automatic Leveling Descriptive Logic 10
- Manual Leveling Procedure 11
- Jack Retract Procedures 11
- Manual Override - Jacks 13
- Manual Override - Power System 13
- Automatic Safety Shutoff 14
- Drive Away Protection System 14
- “Jacks Down" Alarm 14
- Fluid Recommendations for Hydraulic Leveling 15

PLUMBING DIAGRAM 17

WIRING DIAGRAM 18

BILL OF MATERIALS 19

WARNING

Failure to act in accordance with the following may result in serious personal injury or death.

The use of the LCI Level-Up Motorhome Leveling System to support the coach for any reason other than which it is intended is prohibited by Lippert's Limited Warranty. The LCI Level-Up Motorhome Leveling System is designed as a "Leveling" system only and should not be used to provide service for any reason under the coach, such as changing tires or servicing the leveling system.

WARNING

Lippert Components Inc. recommends that a trained professional be employed to change the tires on the coach. Any attempts to change tires or perform other services while coach is supported by the LCI Level-Up Motorhome Leveling System could result in death, serious injury and/or damage to the motor home.

Prior to Operation

The leveling system shall only be operated under the following conditions:

1. The coach is parked on a reasonably level surface.
2. The coach “PARKING BRAKE” is engaged.
3. The coach transmission should be in the neutral or park position.
4. Be sure all persons, pets and property are clear of the coach while LCI Level-Up Motorhome Leveling System is in operation.
5. Clear all jack landing locations of debris and obstructions. Locations should also be free of depressions.
6. When parking the coach on extremely soft surfaces, utilize load distribution pads under each jack.
7. Be sure to keep hands and other body parts clear of fluid leaks. Oil leaks in the LCI Level-Up Motorhome Leveling System may be under high pressure and can cause serious skin penetrating injuries.
8. Never lift the coach completely off the ground. Lifting the coach so the wheels are not touching the ground will create an unstable and unsafe condition.

NOTE: After starting the automatic leveling cycle it is very important that you do not move around in the coach until the unit is level and the green LCI logo light illuminates in the center of the touchpad. Failure to remain still during the leveling cycle could have an effect on the performance of the leveling system.

System Description

The LCI Level-Up Motorhome Leveling System is an electric/hydraulic system. A 12V DC electric motor drives a hydraulic pump that moves fluid through a system of hoses, fittings and jacks to level and stabilize the coach.

The LCI Level-Up Motorhome Leveling System is totally integrated into the chassis of the coach at the manufacturer.

If the leveling motor should fail, contact Lippert Components, Inc. to obtain replacement parts.

Disassembly of the Pump Assembly voids the warranty.

Mechanical portions of the LCI Level-Up Motorhome Leveling System are replaceable. Contact Lippert Components, Inc. to obtain replacement parts.

Component Description

The LCI Level-Up Motorhome Leveling System consists of the following major components:

Lippert jacks are rated at a lifting capacity appropriate for your coach. Each jack has a 9" diameter (63.5-square-inch) shoe on a ball swivel for maximum surface contact on all surfaces. (12" dia. - 113-square-inch shoe also available.)

Each jack is powered from a central 12V DC motor/pump assembly, which also includes the hydraulic oil reservoir tank, control valve manifold, and solenoid valves.

The LCI Level-Up Motorhome Leveling System is controlled electronically from the driver's seat of the coach. The control panel is mounted in the dash. The system can be operated in a manual mode or a fully automatic mode.

Fluid Recommendation

The LCI Level-Up Motorhome Leveling System is pre-filled, primed and ready to operate direct from the manufacturer. Automatic transmission fluid (ATF) with Dexron III or Mercon 5 or a blend of both is recommended by Lippert Components, Inc. Specific fluid information can be found on page 15.

NOTE: In colder temperatures (less than 10° F) the jacks may extend and retract slowly due to the fluid's molecular nature. For cold weather operation, fluid specially formulated for low temperatures may be desirable. Please consult fluid specifications on page 15.

Preventative Maintenance Procedures

1. Check fluid in reservoir every 12 months. If fluid is a clear, red color, do not change. If fluid is milky, pink and murky, and not clear red in color, drain reservoir and add new fluid. Use recommended fluid (see page 15).
   - **A.** Check fluid only when all jacks are fully retracted.
   - **B.** When checking fluid level, fill to within ¼ to ½ inch of fill spout.
2. Inspect and clean all Power Unit electrical connections every 12 months. If corrosion is evident, spray unit with WD-40 or equivalent.
3. Remove dirt and road debris from jacks as needed.

⚠WARNING

Your coach should be supported at both front and rear axles with jack stands before working underneath. Failure to do so may result in personal injury or death.

4. If jacks are down for extended periods, it is recommended to spray exposed leveling jack rods with a silicone lubricant every seven days for protection. If your coach is located in a salty environment, it is recommended to spray the rods every 2 to 3 days.

NOTE: OEM to install attachment brackets for leveling jacks.

Aluminum Jacks

Fig. 1

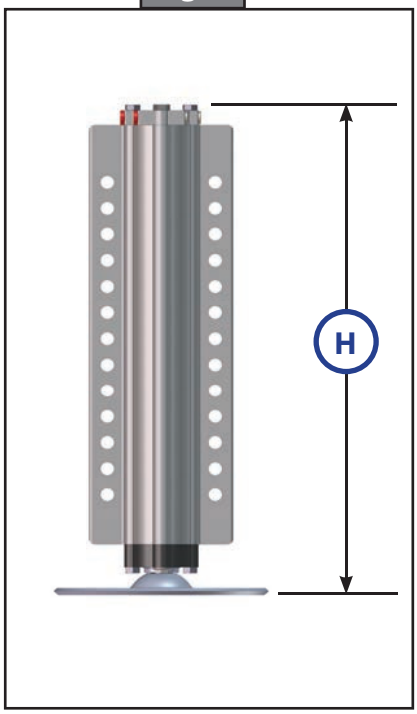

Fig. 2

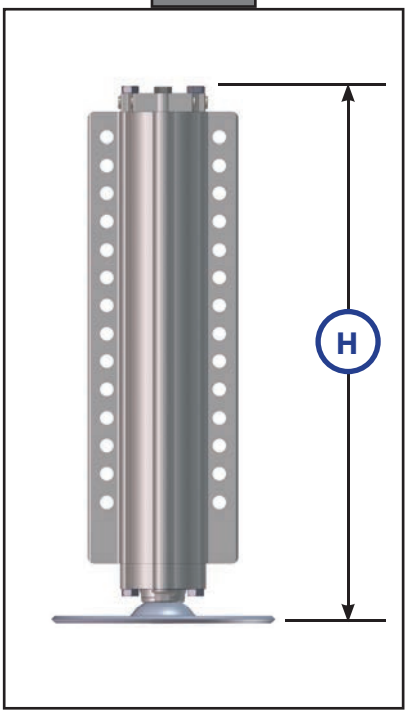

Fig. 3

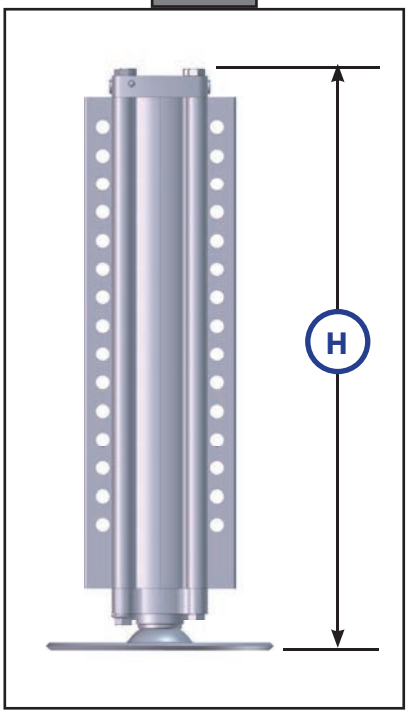

Fig. 1 - 195860	Fig. 2 - 236560	Fig. 3 - 258550
CAPACITY - 8,000 lb.	CAPACITY - 14,000 lb.	CAPACITY - 20,000 lb.
STROKE - 15.00 in.	STROKE - 15.13 in.	STROKE - 16.00 in.
BORE - 2.00 in.	BORE - 2.50 in.	BORE - 3.00 in.
H - 21.375 in.	H - 21.50 in.	H - 23.063 in.
ROD DIA. - 1.50 in.	ROD DIA. - 1.875 in.	ROD DIA. - 2.25 in.
9″ FOOT PAD-STANDARD	9″ FOOT PAD-STANDARD	9″ FOOT PAD-STANDARD
12″ FOOT PAD-OPTION - 117238	12″ FOOT PAD-OPTION - 117238	12″ FOOT PAD-OPTION - 117238

Power Unit Components

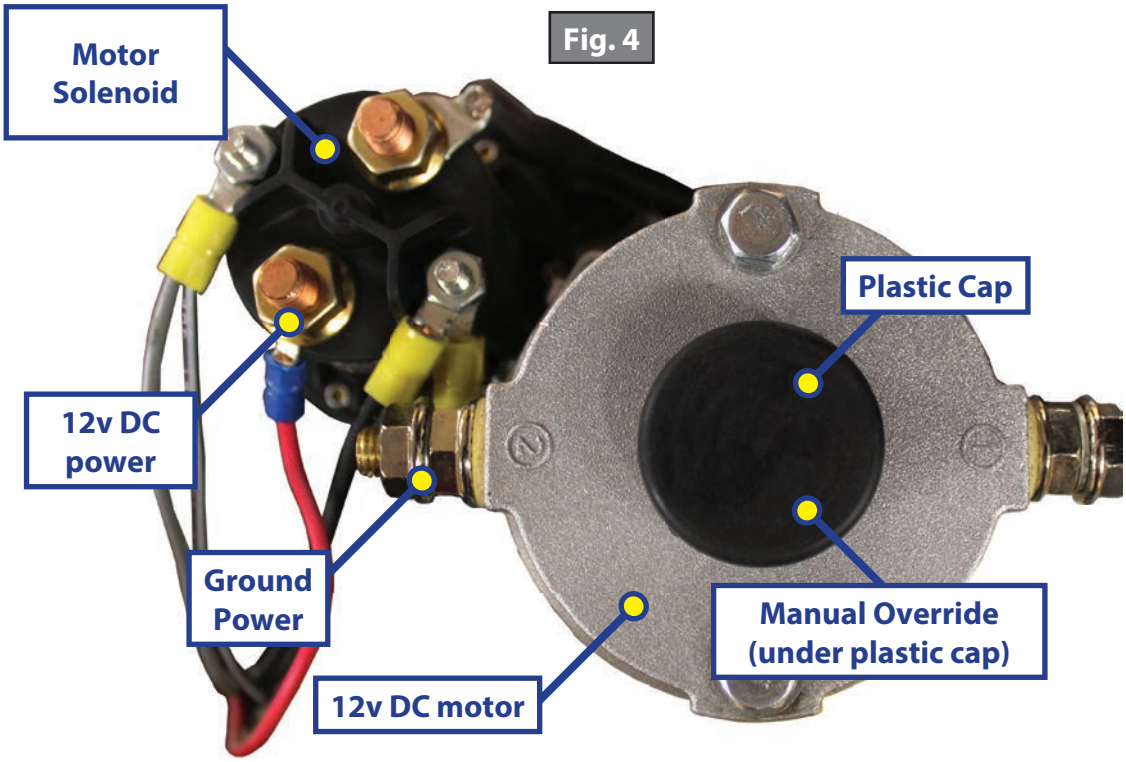

Fig. 4

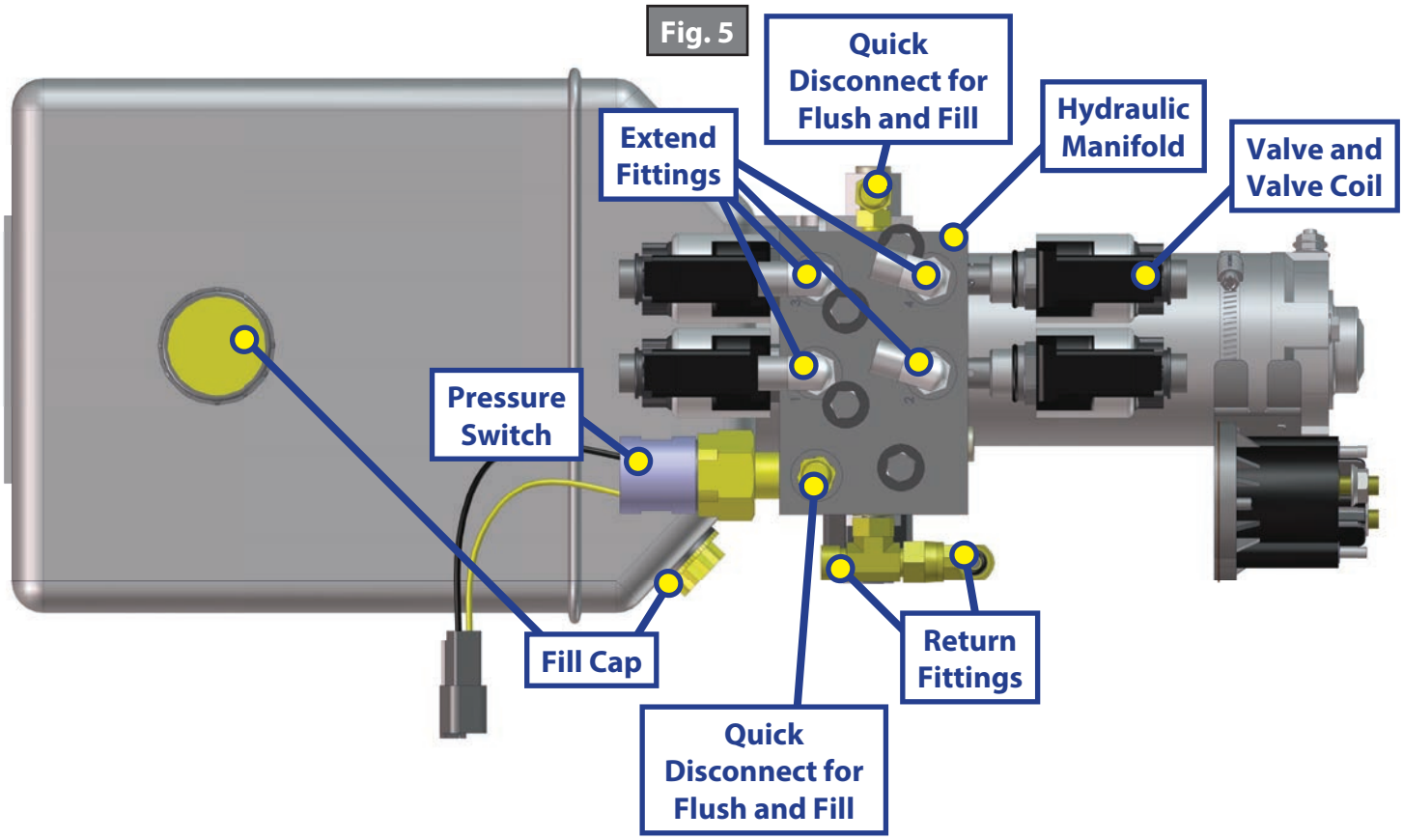

Fig. 5

1. Fittings - High Pressure O-Ring Face - Size 4
2. Hose - ¼" I.D. 3000PSI - W.P. Rated

NOTE: Fittings are labeled with port assignments found stamped into the manifold for easy identification.

Controls

Features

- Automatic extension of jacks from full retract position (with automatic ground detection).
- Automatic leveling of jacks.
- Manual leveling of jacks.
- Automatic retraction of jacks (with automatic full retract detection).
- Air bag suspension features (configurable on/off).
- Emergency retract/user alarm mode (jacks not retracted and park brake disengaged).
- Automatic jack error detection and error mode.
- Configuration mode for Air features.
- Configuration modes for Leveling Zero Point.
- Remote operation.

System Wiring Requirements

- Battery power (2 ga. SAE J1127. Type SGX).
- Battery ground (2 ga. SAE J1127. Type SGX).
- Logic power (switched via ignition).
- Power brake signal (open=park brake disengaged, GND=park brake engaged).
- 4-wire harness connecting Controller to Touch Panel.
- Jacks status input-Switched to GND

A. Jacks not all up – switch closed to ground

B. Jacks all up – switch open.

Air and Auxiliary Features

(When Applicable)

System has the option to control external Air and Auxiliary features.

When enabled, the feature works according to the following logic:

- Air bag pressure automatically lowered when starting the auto or manual sequence to maximize lift of jacks.
- An Auxiliary mode activated when starting an auto retract sequence to fill air bags.
- Auxiliary is active when jacks are all retracted and park brake is disengaged to fill airbags.

The Manual Air Bag Dump/Fill functions as follows:

1. Set park brake.

2. Scroll up twice to “MANUAL AIR CONTROL”.

3. Press enter.

4. Press rear arrow to dump, front arrow to fill.

Level Zero Point Calibration

Before auto leveling features are available, the Level Zero point must be set. This is the point to which the system will return when an auto leveling cycle is initiated.

To set the zero point (controller module must be fully secured in production-intent location), first run a manual leveling sequence to get the vehicle to the desired level point. Then activate the Level Zero point configuration mode.

This mode is enabled by performing the following sequence:

1. Turn panel off.
2. Press the Front switch 10 times (On Winnebago units, press FRONT 5 times).
3. Press the Rear switch 10 times (On Winnebago units, press REAR 5 times).
4. At this point, a tone will sound and the display will read ZERO POINT CALIBRATION.
5. Press ENTER to set the zero point.
6. Screen will then display Zero Point Stability Check and PLEASE WAIT.
7. Tone will sound and the screen will display ZERO POINT SUCCESSFUL.
8. Control will then turn off.

For Diesel Units with Air Bag Suspensions ONLY:

The leveling control will automatically detect an air bag system. If the unit does not use air bags, the display will read “NO” for air bag control. If the display reads "NO," but an air bag system is present on the unit:

1. Confirm harness is connected properly.
2. Run Auto-Level function.
3. Recalibrate the Zero Point.
4. If the air bag system is still not being detected, contact the OEM for more information.

User Alarm Mode

If the alarm system detects that the park brake has been disengaged while at least one jack is not fully retracted and the sensor value changes in any axis more than a predefined amount, the panel will signal this error to the user.

When in alarm mode, all LEDs will flash and the buzzer will beep. The Status LEDs will show the system status.

The system performs an automatic retract.

No other features are available in this mode.

Miscellaneous

- The system will automatically shut down after 4 minutes of no operation.
- Auto leveling cycle cannot be started until all jacks are fully retracted. Make sure jacks are retracted before attempting to auto level. (Unit will perform full retract automatically if jacks are down on the request of an auto cycle.)
- System will refuse any operation when a low voltage condition is present.
- System will automatically alarm and retract if park brake is disengaged and jacks are not retracted with any change in sensor readings. In alarm mode, the only available feature is to retract all jacks.
- Please note WAIT display shows the status of Air/Auxiliary features.

NOTE: The LEDs blink differently when in special controller modes (error, alarm, and configuration). Learning how to recognize these modes is important. Excess angle LED blinks whenever the Y axis (vehicle length) is over 5° from programmed level point.

Low Voltage Signal

1. The vehicle requires 12.7V DC to operate in the AUTO mode. If the voltage is too low, the screen will display LOW VOLTAGE. If voltage drops below 12.7V DC, the system will only operate in the MANUAL MODE and continue to display LOW VOLTAGE.
2. Minimum Voltage - If voltage drops below 9.5V DC during AUTO or MANUAL operation LOW VOLTAGE will appear in the screen and the system will cease operating.

Excess Angle

1. The control will not operate at extreme slopes, i.e. 3.5 degrees fore and aft and 3.5 degrees side to side.
2. If the coach indicates "EXCESS ANGLE" or "JACKS STROKED OUT" during an auto level cycle, move the coach to a more level spot.

Error Mode

NOTES:

- If an error occurs before or during operation, the error will be displayed in the LCD and an alarm will sound. To reset all error or service displays, push RETRACT and ENTER at the same time.
- All normal functions will be disabled when the system is in Error Mode.
- Auto Level can only commence if running voltage is 12.7V DC or above.
- Auto Level operation will halt if running voltage drops to 9.5V DC.
- Manual Level operation can be performed at all running voltages above 9.5V DC.

Operation

Error Text	Description
Excess Angle	Excess slope for auto leveling
Feature Disabled	Control not zeroed
External Sensor	Remote sensor short or disconnected
Out of Stroke	Check campsite for even, level ground and turn engine on - Check battery voltage under load.
Low Voltage	Turn engine on - Check battery voltage under load.
Function Aborted	Panic stop
Jack Timeout	Auto mode/Retract timeout
Auto Level Fail	Unable to level
Not Configured	Control not zeroed
Zero Not Set	Control not zeroed
Battery Voltage	Turn engine on - Check battery voltage under load
Apply Park Brake to Auto Level	Set parking brake
Unit has retracted for longer than 50 seconds	Retract timeout return leveling jacks for service. Latched retract mode
Unable to Finish Leveling	Move coach to a more level site
Check Wiring	Touchpad is powered, but not communicating with the brain. Check pin 1 and 2 of touchpad harness
Caution, Excess Run Time	Pump run too long in manual mode
Latched Retract / Service	Check for leaking jack hose or fitting, reset by pressing retract and enter at the same time

Selecting a Site

When the coach is parked on an excessive slope the leveling requirements may exceed the jack lift stroke capability. If the coach is parked on an excessive slope, the coach should be moved to a more level surface before the leveling system is deployed.

EXCESS ANGLE will appear on the LCD screen if the coach is 3.5 degrees out of level front to rear or side to side. See Page 9.

Automatic Leveling Procedure

NOTE: Refer to Fig. 6, page 12, for questions regarding location and functions of the Lippert Components Inc. Electronic Leveling System.

NOTE: Coach must be running for LCI Electronic Leveling System to operate.

1. Push ON/OFF button on Control Panel. The system is now operational and the electronic level lights will become active.
2. Check to see that the Control Pad ENGAGE PARK BRAKE is engaged.
3. Push the AUTO LEVEL button to begin the automatic leveling cycle.
4. Push ON/OFF button to de-energize the system.

Automatic Leveling Descriptive Logic

Grounding: Steps 1-3 describe the process of how the AUTO LEVEL LOGIC extends the jacks to the ground:

1. Depending on which end of the coach is lowest to the ground, the level sensor in the brain will activate the jacks, one at a time on the lowest end first, either front or rear.
   - **A.** Ground lowest side jack first; i.e., front passenger side.
   - **B.** Ground remaining side jack next; i.e., front driver side.
2. Together, both jacks will lift lowest end until level; i.e., front of coach will lift briefly until the coach is level.
3. The system will then ground remaining jacks, one at a time; i.e., rear jacks.
   - **A.** Ground lowest side jack first; i.e., rear passenger side.
   - **B.** Ground remaining side jack next; i.e., rear driver side.

Leveling: Steps 4-6 describe the process of how the AUTO LEVEL LOGIC levels the coach once the jacks have been grounded. This process may repeat several times until level.

4. Fore/Aft
5. Side/Side
6. Individual
   - **A.** Minor adjustments to limit/prevent twist

NOTE: After starting the automatic leveling cycle, it is very important that you do not move around in the coach until the unit is level and the green LCI logo light illuminates in the center of the touchpad. Failure to remain still during the leveling cycle could have an effect on the performance of the leveling system.

⚠WARNING

Never lift all the wheels off the ground to level the coach! Lifting all wheels off the ground may result in serious personal injury or death.

Manual Leveling Procedure

NOTE: When leveling your coach, the coach should be leveled from FRONT TO REAR first (step 2-4). When the coach is level from FRONT TO REAR, then level the coach from LEFT TO RIGHT (step 5).

NOTE: Coach requires 12.7V DC to commence auto leveling function. If voltage at the power unit is not 12.7V DC, run the engine.

1. Push ON/OFF button on control panel. The system is now operational and the ON/OFF light will be lit.
2. Push DOWN ARROW to display MANUAL LEVEL on the screen. Push ENTER to set.
3. Push FRONT button until jacks contact the ground and lift the front of the coach 1-2 inches.
4. Push REAR button until jacks contact the ground and lift rear of coach. Keep button depressed until level indicator displays level.
5. Push LEFT or RIGHT button. If level indicator is toward left of coach, push RIGHT button. If level indicator is toward right of coach push LEFT button. Keep button depressed until level indicator displays level.

NOTE: The right and left jacks are used to level the coach side to side. Pushing the LEFT button on the control panel will extend both left jacks. Pushing the RIGHT button on the control panel will extend both right jacks. Jacks always work in pairs, both front jacks; both right side jacks, etc.

6. Repeat steps 2 through 5 if needed.
7. Turn power off to leveling system by pushing ON/OFF button.
8. Visually inspect all jacks to ensure all shoes are touching the ground. Should one of the rear jack shoes not be touching the ground, press the corresponding LEFT or RIGHT button to lower the non-compliant jack to the ground.

⚠WARNING

Never lift all the wheels off the ground to level the coach! Lifting all wheels off the ground may result in serious personal injury or death.

Jack Retract Procedures

1. Energize the system by pushing ON/OFF button on control panel. The LCD screen will display JACKS DOWN.
2. Push DOWN ARROW to display AUTO RETRACT on the screen.
3. Push ENTER to begin automatically retracting the jacks.

NOTE: If you wish to stop the jacks from retracting, turn the system off and back on again by pushing the ON/OFF button twice. The coach can then be manually leveled by following steps 1-5 in the MANUAL LEVELING PROCEDURE section above. Press ENTER to acknowledge.

4. When the JACKS DOWN display goes off, push the ON/OFF button on the Control Panel to de-energize the system. After a brief visual inspection around the coach to verify the jacks are fully retracted, you may proceed to travel.

NOTE: To retract in the MANUAL mode, push the RETRACT button until it lights. By pushing any of the JACK buttons, the jacks will retract in pairs, i.e. FRONT button, both front jacks will retract, etc.

5. “AUTO RETRACT” can also be commenced by pushing and holding the “RETRACT“ button for 1 second.

NOTE: In cold weather operation, always check to make sure all jacks, slide rooms and steps are fully retracted before travel.

Fig. 6

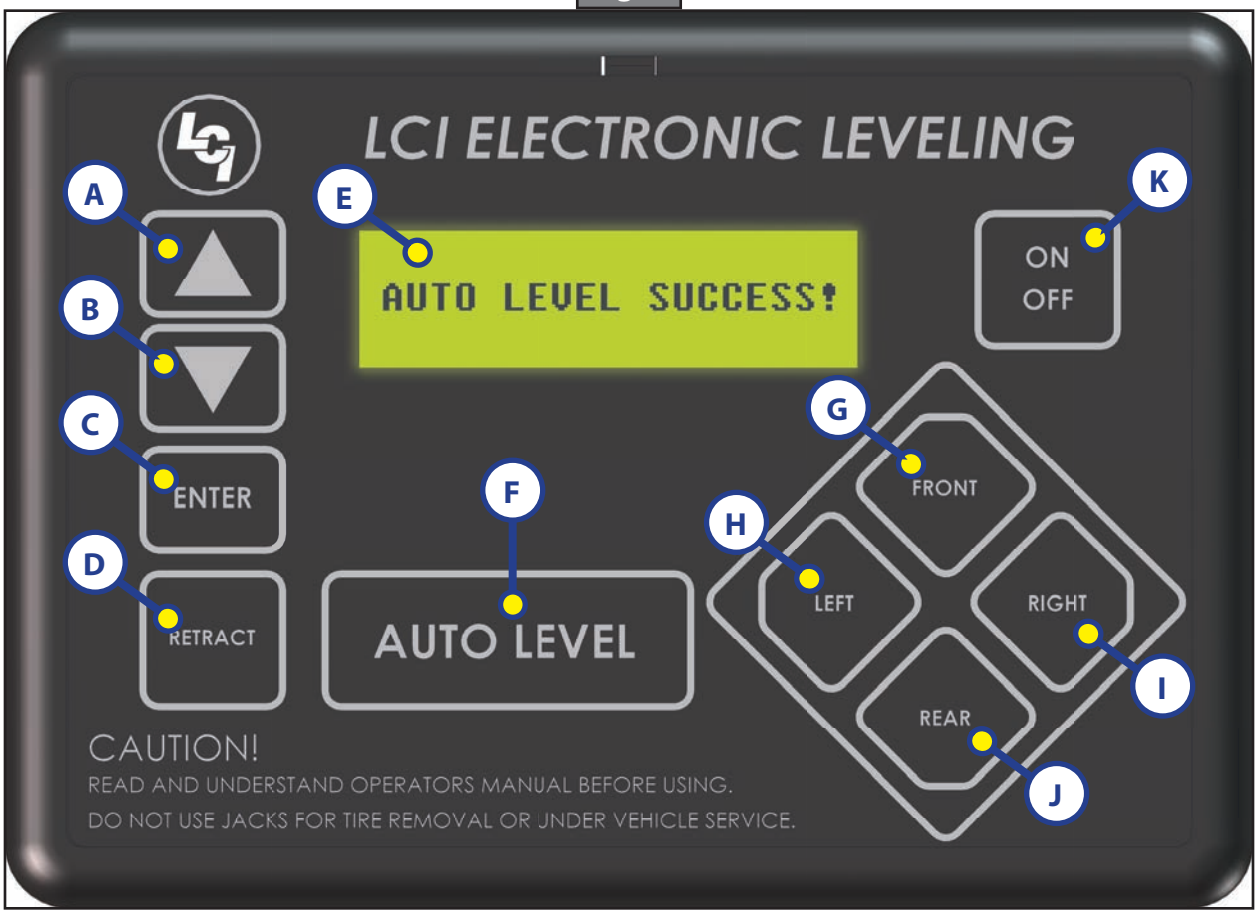

Callout	Description
A	Up Arrow - Scrolls up through the menu on LCD.
B	Down Arrow - Scrolls down through the menu on LCD.
C	Enter - Activates modes and procedures indicated on LCD.
D	Retract - Places leveling system into retract mode. - Manual mode ONLY
E	LCD Display - Displays procedures and results.
F	Auto Level - Places leveling system into auto level mode.
G	Front Jack Button - Activates both front jacks in manual mode.
H	Left Jack Button - Activates both left jacks in manual mode.
I	Right Jack Button - Activates both right jacks in manual mode.
J	Rear Jack Button - Activates both rear jacks in manual mode.
K	Power Button - Turns leveling system on and off.

Manual Override - Jacks

In the event that the jacks will not extend or retract, the valves can be manually overridden by using a 5/32" hex wrench to turn the manual override clockwise on the valve (See Fig. 7). The leveling jacks can then be extended or retracted. Remember to turn the manual override completely counterclockwise (See Fig. 8) until it will no longer turn to close the valve after the jacks have been completely extended or retracted. Do not over-tighten override set screws, as this can damage the valves.

Fig. 7

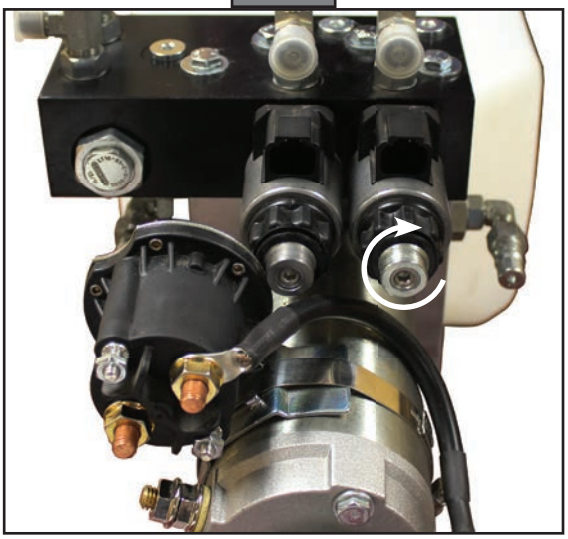

Clockwise for manual override

Fig. 8

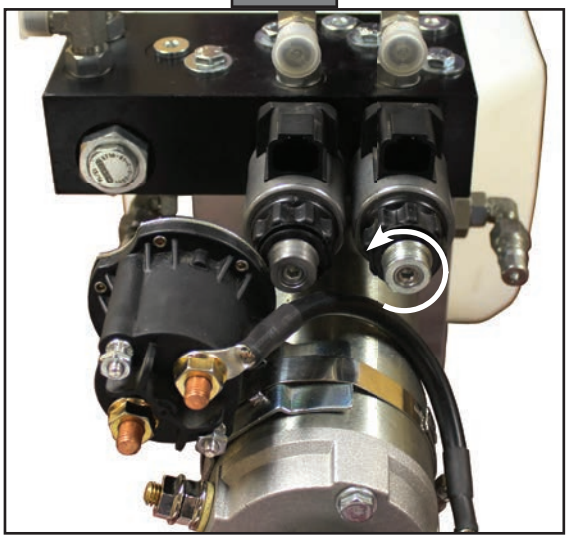

Counter-clockwise for normal operation

Manual Override - Power System

The Lippert LCI Level-Up Motorhome Leveling System can be run with auxiliary power devices like cordless or power drills. In the event of electrical or system failure, this manual method of extending and retracting the jacks can be used. A standard handheld drill is all that is required. See the instructions below.

Fig. 9

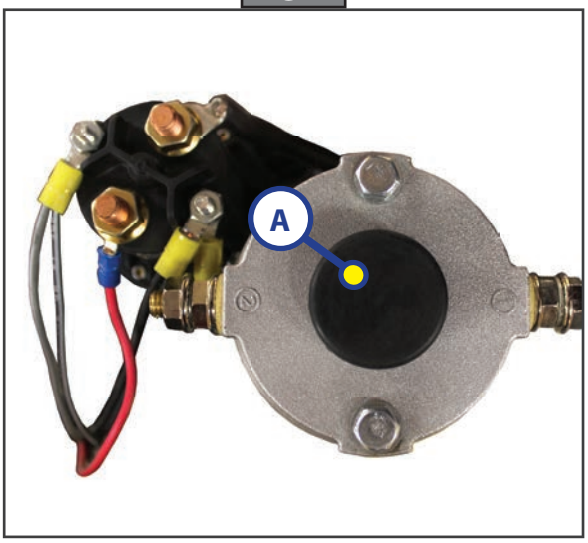

Fig. 10

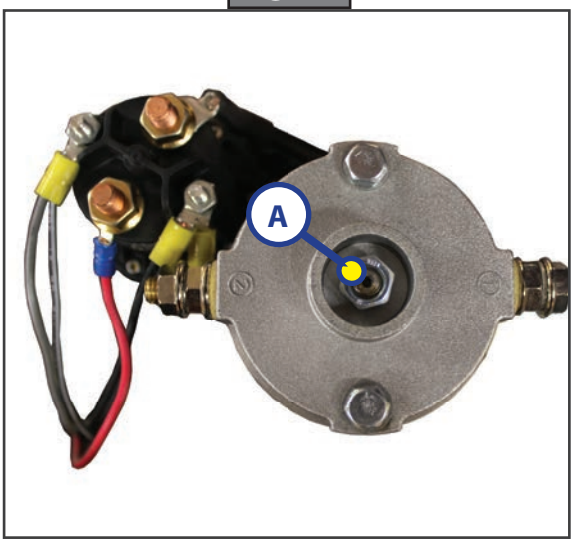

1. Remove plastic cap (Fig. 9A).
2. Disconnect or shield power cables on the motor.
3. Using a ½" socket and auxiliary drive device, i.e. cordless or power drill, insert ½" socket onto coupler found under plastic cap (Fig. 10A).
4. Run drill in reverse or counterclockwise to retract jacks.

Automatic Safety Shutoff

If the control panel is left on and inactive for four minutes it will shut off automatically. To reset the system, the coach ignition must be turned off, then back on, and the ON/OFF button must again be pushed.

Drive Away Protection System

If the ignition is in the "RUN" position, jacks are down, and the operator releases the parking brake, all indicator lights will flash and the alarm beeper will activate. The system will then automatically retract the jacks until the jacks are fully retracted or the operator resets the parking brake.

The power unit will also operate to keep the jacks retracted in the event the leveling system loses pressure as the coach is being driven.

"Jacks Down" Alarm

The LCI Level-Up Motorhome Leveling System is designed to sound an alarm and illuminate the control panel in the event of two (2) possible scenarios:

1. A "RETRACT" hose leaks.

2. The pressure holding the jacks in the retracted position falls to approximately 1500 psi to sound the alarm. If the alarm sounds and the control panel illuminates and flashes while driving the vehicle:

- **A.** Immediately find an area to safely pull the vehicle off of the roadway.
- **B.** Set the PARKING BRAKE.
- **C.** Inspect all jacks, hoses, and valves for leaks. If no leaks are observed;
  - **I.** Turn control panel "ON."
  - **II.** Push "RETRACT ALL JACKS" button.
  - **III.** Wait until "JACKS DOWN" light and alarm are off.
  - **IV.** Inspect jacks. If jacks are retracted and no leaks are observed, vehicle can be driven.

NOTE: If system is leaking or alarm does not subside after applying the above procedure, disconnect wires from pressure switch and proceed immediately to a service center. The pressure switch is a blue and gold colored valve located on the power unit manifold identified by the spark proof style connector with yellow and black wires. (See Page 6, Fig. 5).

NOTE: For prolonged travel to the service center, be sure to stop and check the disposition of the leveling jacks every so often to make sure they are not extending.

Fluid Recommendations for Hydraulic Leveling

1. Operation at air temperatures routinely above 0°C (32°F)
   - Dexron 3/Mercon ATF
   - Mercon 5 ATF
   - Dexron 6 ATF
   - PetroBlend (Mason City, IA) PHO 0022S (synthetic group 3 base blend)
   - Bellman All Temp 22 (Bremen, IN)
   - Or any ATF or hydraulic fluid with a pour point lower than -42°C (-45°F)
2. Operation at air temperatures routinely below freezing, 0°C (32°F)
   - Mobil 1 full synthetic ATF
   - Royal Purple full synthetic ATF
   - Valvoline full synthetic ATF
   - Amzoil full synthetic ATF
   - PetroBlend (Mason City, IA) PHO 0022S (synthetic group 3 base blend)
   - Bellman All Temp 22 (Bremen, IN)
   - Or any ATF or hydraulic fluid with a pour point lower than -42°C (-45°F)
   - Multivis (all temperature) iso 22 hydraulic fluid
   - Or any ATF or hydraulic fluid (conventional or synthetic) with a pour point lower than -46°C (-50°F)
3. Operation at air temperatures routinely below -18°C (0°F)
   - Kendall Glacial Blue
   - Benz Oil (Milwaukee, WI) Flomite 530
   - Or any conventional or synthetic ATF or hydraulic fluid with a pour point less than -57°C (-70°F) and viscosity less than 2850 cP @ -40°C (-40°F).

Problem	Probable Cause	Corrective Action
System will not turn on and On/Off indicator light does not illuminate	Coach ignition not in RUN position	Turn ignition to RUN position
	Parking brake not set	Set parking brake
	Controls have been on for more than four minutes and have timed out	Turn ignition OFF and then back ON
Control panel turns on but turns off when jack button is pushed or displays "Low Voltage"	Low voltage on battery	Start coach to charge battery
Control panel turns on, coach will not auto level, "Jacks Down" displayed, jacks are retracted	Low fluid level	Change fluid level in reservoir. If fluid is low, add fluid to 1/2" from top of reservoir with jacks retracted. If JACKS DOWN light remains on, call Lippert Service.
Jacks will not extend to ground, pump is running	Little to no fluid in reservoir	Add fluid as recommended; See page 15.
	Leg valve is inoperative	Clean, repair or replace
	Electronic signal is lost between control and leg valves	Trace wires for voltage drop or loss of signal. Repair or replace necessary wires or replace control pad.
Any one or two jacks will not retract	Hose damaged or unconnected	Replace with new hose or reconnect hose
	Valve inoperative	Replace inoperative valve
	Electronic signal is lost between control and solenoid	Attempt to retract jacks in MANUAL mode. If successful, replace control pad. If not, test for voltage drop between control pad and leg valve. Repair bad wiring or replace defective board or valve.
"Jacks Retracted" does not display when all jacks are retracted	Low fluid level	Add fluid as recommended; See page 15.
	Retract pressure switch inoperable	Check connection or replace
Alarm sounds and "Jacks Down" light starts flashing while traveling, jacks are fully retracted	Low fluid level	Add fluid as recommended; See page 15.
	Retract pressure switch inoperable	Check connection or replace
Jack bleeds down after being extended	Valve Manual Override open	Close override. See Page 13, Fig. 8.
Control panel powers up, screen displays "Low Voltage"	Engine not running	Start coach engine
No power to control panel	Tripped circuit breaker	Reset
	Ignition not ON	Turn ignition ON
Auto level function does not finish	Error code "Unable to Finish Leveling"	Move coach to a more level site

Plumbing Diagram

Fig. 11

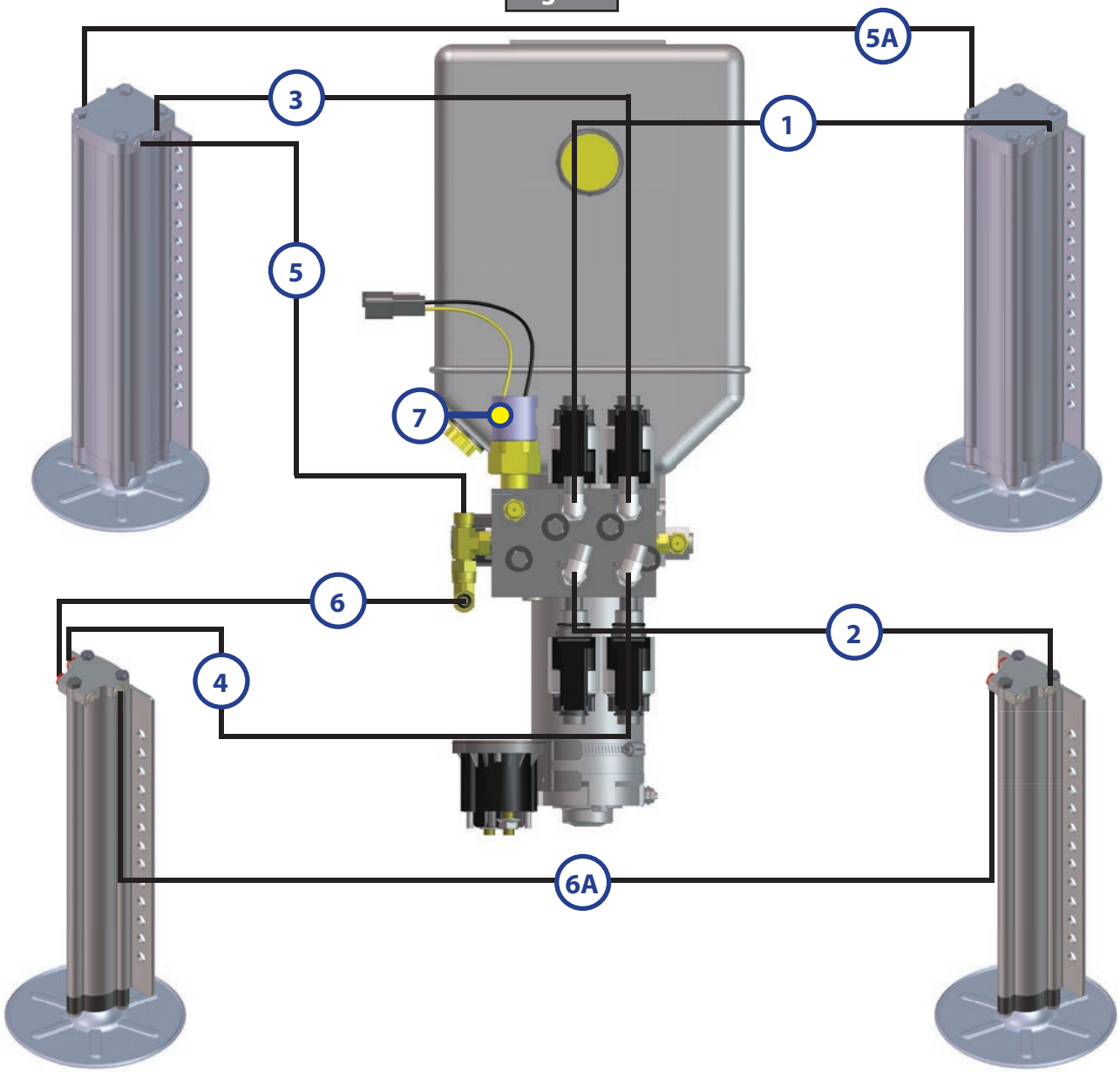

NOTE: HOSE KIT - 293728; Hoses will vary in length by coach model.

Measure hose and consult LCI Service; Hose Specs. 3000 p.s.i.; 1/4" in. I.D.

A. Leveling Jack EXTEND ports (Fig. 12A)

B. Leveling Jack RETRACT ports (Fig. 12B)

1. Left (Road) Rear - Black Hose - BLUE Valve Wire

2. Left (Road) Front - Black Hose - GREEN Valve Wire

3. Right (Curb) Rear - Black Hose - RED Valve Wire

4. Right (Curb) Front - Black Hose - PURPLE Valve Wire

5. Rear Return - Orange Hose

5A. Rear Return Crossover - Orange Hose

6. Front Return - Orange Hose

6A. Front Return Crossover - Orange Hose

7. Pressure Switch - YELLOW & BLACK Wires

Fig. 12

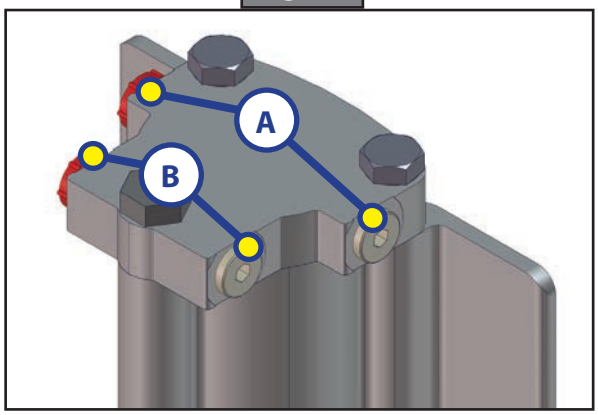

Wiring Diagram

Fig. 13

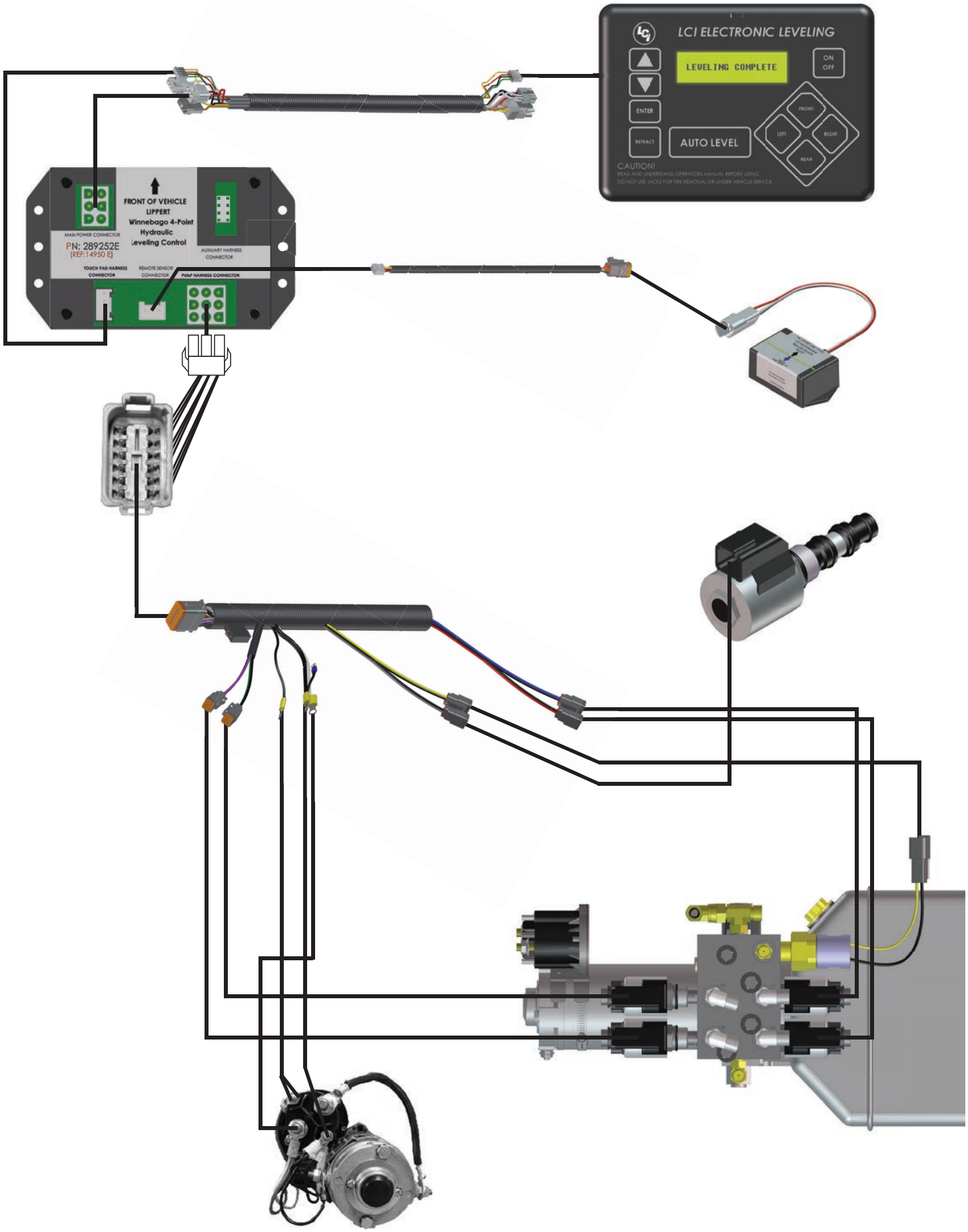

12-PIN WIRE HARNESS (Fig. 14)

1. WHITE (CHASSIS POWER)
2. BLACK W/ WHITE(PUMP SOLENOID)
3. RED (CURBSIDE REAR VALVE)
4. GREEN (ROADSIDE FRONT VALVE)
5. YELLOW (PSI SWITCH)
6. BLUE (ROADSIDE REAR VALVE)
7. BROWN (GROUND)
8. PURPLE (CURBSIDE FRONT VALVE)
9. GREY (PUMP SOLENOID)
10. AUX
11. AUX
12. AUX

Fig. 14

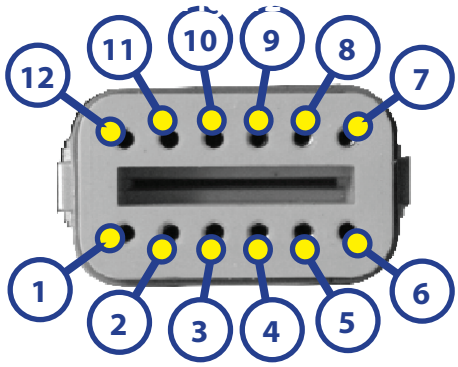

Bill of Materials

Description	Part #	Details	Quantity
Power Unit	196471	Hydraulic Power Unit, Leveling Only	1
Power Unit	175249	Hydraulic Power Unit, Leveling Only	1
Power Unit	293559	Hydraulic Power Unit, Leveling Only	1
Motor	179327	12VDC Motor for Power Unit	1
Solenoid	161394	Motor Solenoid	1
Valve	177094	Blocking Valve	4
Valve	259524	Directional Valve	1
Coil	174184	Electromagnetic Coil for Blocking Valve	5
Pressure Switch	142927	2150 PSI Rated Pressure Switch	1
Pump Harness	178373	Electrical Harness for Power Unit	1
Main Harness	178375	30' Hydraulic Leveling Main Harness	1
Touchpad - Brain Harness	178279	Electrical Harness between Touch Pad & Brain	1
Remote Sensor Harness	241314	Remote Sensor to Brain Harness	1
Brain	289252	Control Module	1
Touchpad	234802	Touch Panel mounted in Dash	1
Remote Sensor	294287	Secondary Level Sensor mounted rearward	1
Hydraulic Jacks	195860	8k Leveling Jacks	*
	236560	14k Leveling Jacks	*
	298550	20k Leveling Jacks	*
Foot Pad	113309	9" Foot Pad for Leveling Jacks	4
	117238	12" Foot Pad for Leveling Jacks - Optional	**

*Jack quantities will either be 2 or 4 depending on OEM specified design.

**Optional - Quantities will vary.

LIPPERT COMPONENTS™

All information contained within may be distributed as a full document only, unless otherwise permitted by explicit consent of Lippert Components Inc. to distribute individual parts.

All information contained within is subject to change without notice. New editions will be posted on www.lci1.com and can be downloaded for free. Information contained within is considered factual until made obsolete by a *NEW* revision.

Please recycle all obsolete materials.

For all concerns or questions, please contact

Lippert Components, Inc.

Ph: (574) 537-8900 Web: www.lci1.com Email: warranty@lci1.com