3.2 Standby Mode

Magnum Energy's MS Series features an internal battery charger and an automatic transfer relay when operating in Standby mode. The Standby mode begins whenever AC power (utility or generator) is connected to the inverter's AC input. Once the AC voltage and frequency of the incoming AC power is within the AC input limits, an automatic AC transfer relay is activated. This transfer relay passes the incoming AC power through the inverter to power the AC loads on the inverter's output. This incoming power is also used to activate a powerful internal battery charger to keep the battery bank charged in case of a power failure. Refer to Figure 3-2 to see the flow of power from the AC input to the DC and AC output while in Standby mode.

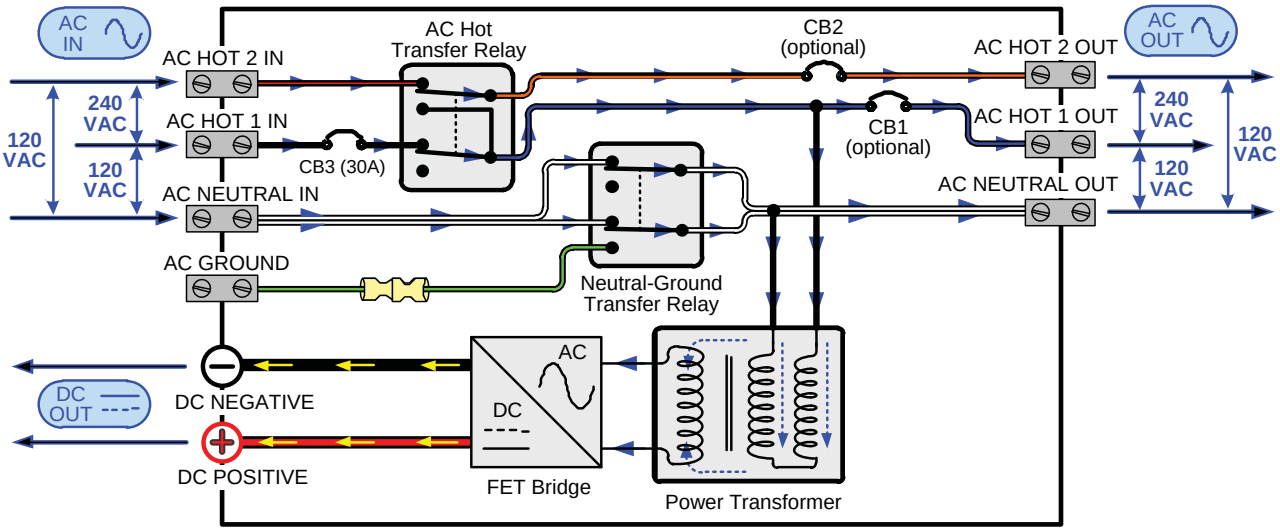

Figure 3-2, Power Flow - Standby Mode

3.3 Battery Charging

The MS Series is equipped with a PFC (Power Factor Corrected) and PI (Proportional-Integral) multi-stage battery charger. The PFC feature controls the amount of power used to charge the batteries to obtain a power factor as close as possible to 1 (or unity). This causes the battery charger to look like a resistor to the line (forces the charge current wave shape to mirror the voltage wave shape). The PI feature allows the charger voltage and current to change independently. These two features maximize the real power available from the AC power source (i.e., utility or generator), which translates into less power wasted and greater charging capabilities than most chargers today.

When an AC source is connected to the AC input, the inverter begins monitoring for acceptable AC voltage. Once the AC voltage is accepted, the AC transfer relay closes the charge mode begins. After the charge mode begins, the inverter's battery voltage is monitored to determine the charging stage. If the battery voltage is low (≤12.8 VDC/12-volt models or ≤25.6 VDC/24-volt models), the charger begins Bulk charging. If the DC voltage is high (>12.8 VDC/12-volt models or >25.6 VDC/24-volt models), the charger will skip the Bulk and Absorb charge stages and go directly to Float charging. However, if the incoming AC power is lost and returns within 2 minutes the charge mode returns to the charge stage it was in prior to losing AC input—regardless of the battery voltage.

The multi-stage charger in the MS Series can use up to five different charging stages to help monitor and keep the batteries healthy. The five stages include an automatic 4-stage charging process (see Figure 3-3): Bulk, Absorb, Float, and Full Charge; and a manual Equalization (EQ) charge stage. The automatic 4-stage charge process provides complete recharging and monitoring of the batteries without damage due to overcharging. The EQ stage (requires a remote display to enable) is used to stir up stratified electrolyte and to reverse any battery plate sulfation that may have occurred.

While charging, the unit may go into charger back-off protection, which automatically reduces the charge current to the batteries. This is caused by: 1) The internal temperature is too hot – the charger automatically reduces the charge rate to maintain temperature; or 2) The AC input voltage falls below 90 VAC – the charger will stop charging to help stabilize the incoming AC voltage.

 © 2012 Magnum Energy, Inc.